SPAN-F722-VTX

Manual V1.0

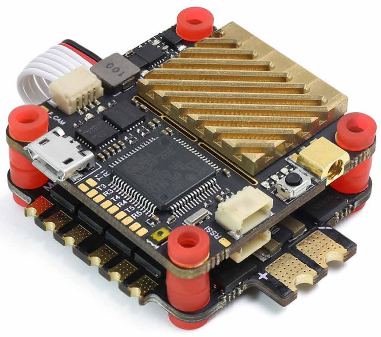

SPECS:

MCU: STM32F722RET6
IMU: 2x ICM20689(SPI)
BlackBox: 32Mb onboard Flash
OSD: BetaFlight OSD w/ AT7456E chip
Baro: BMP280
BEC Output: 5V@2A
Integrated LC Filter
Firmware target: EXF722DUAL
Size: 36x36mm board, φ4mm with Grommets φ3mm
Power input: 3-6S LiPo

5.8G 600mW VTX:
Channel: 48
Power transmission: 0mW(Pit mode) / 25mW / 100mW / 200mW / 600mW
Connector type: MMCX Connector
Traditional button
IRC Tramp protocol

BL32 50A ESC 4IN1:
MCU: STM32FO51K86(32bit 48mHz)
Continuous Current: 50A
Peak Current: 55A (5S)
Current sensor: YES
Telemetry: Supported
Support DSHOT1200/DSHOT600, PWM, Multishot, OneShot
Firmware Version:GEPRC-BL32-4IN1
Input Voltage: 3-6S Lipo

Instruction Diagram

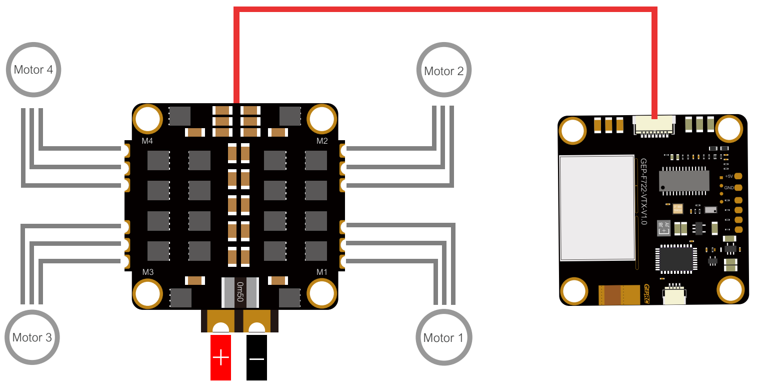
Motor 4
Motor 2
Motor 3
Motor 1
M4
M2
M3
M1
3-6S Lipo battery

BLHeli_32 G50A 4in1 ESC(36*36 mm)

F722-DUAL-VTX Flight Controller(36*36mm)

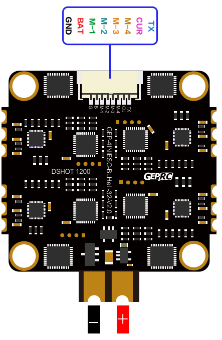
GND
BAT
M-1
M-2
M-3
M-4
CUR
TX
DSHOT 1200
GEP-4INIESC-BLHeli-32-V2.0

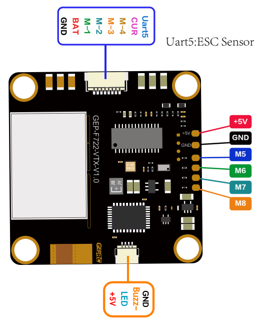
GND
BAT
M-1
M-2
M-3
M-4
CUR
Uart5
+5V
GND
M5
M6
M7
M8
GND
Buzz-
LED
+5V
GEP-F722-VTX-V1.0

Uart5:ESC Sensor

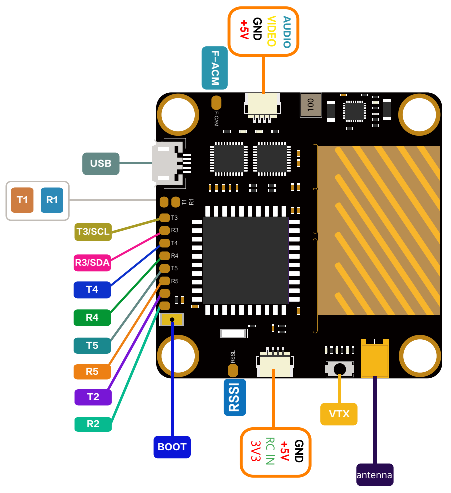
AUDIO
VIDEO
GND
+5V
F-ACM
USB
T1
R1
T3/SCL
R3/SDA
T4
R4
T5
R5
T2
R2
BOOT
RSSI
GND
+5V
RC IN
3V3
VTX
antenna

Receiver

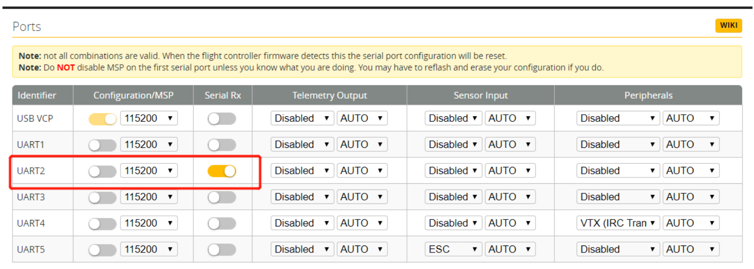

Ports

WIKI

Note: not all combinations are valid. When the flight controller firmware detects this the serial port configuration will be reset.
Note: Do **NOT** disable MSP on the first serial port unless you know what you are doing. You may have to reflash and erase your configuration if you do.

Identifier	Configuration/MSP		Serial Rx	Telemetry Output		Sensor Input		Peripherals	
USB VCP	●	115200	○	Disabled	AUTO	Disabled	AUTO	Disabled	AUTO
UART1	○	115200	○	Disabled	AUTO	Disabled	AUTO	Disabled	AUTO
UART2	○	115200	●	Disabled	AUTO	Disabled	AUTO	Disabled	AUTO
UART3	○	115200	○	Disabled	AUTO	Disabled	AUTO	Disabled	AUTO
UART4	○	115200	○	Disabled	AUTO	Disabled	AUTO	VTX (IRC Tran	AUTO
UART5	○	115200	○	Disabled	AUTO	ESC	AUTO	Disabled	AUTO

SBUS

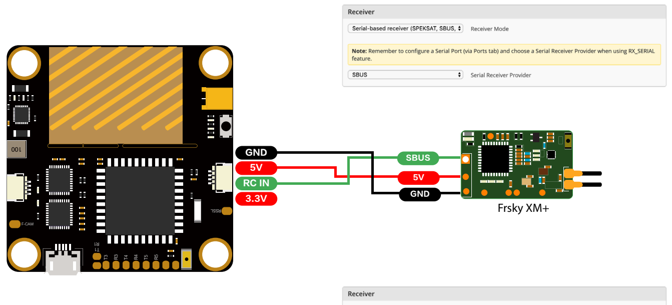

Receiver

Serial-based receiver (SPEKSAT, SBUS, — Receiver Mode

Note: Remember to configure a Serial Port (via Ports tab) and choose a Serial Receiver Provider when using RX_SERIAL feature.

SBUS — Serial Receiver Provider

GND
5V
RC IN
3.3V
SBUS
5V
GND
Frsky XM+
Receiver

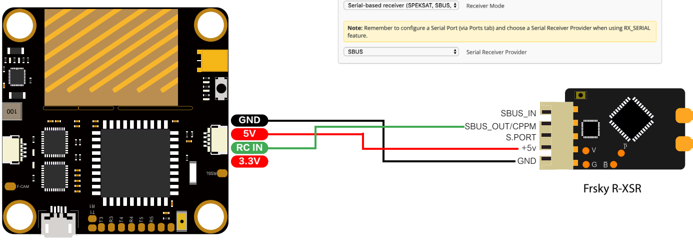
GND
5V
RC IN
3.3V
SBUS_IN
SBUS_OUT/CPPM
S.PORT
+5v
GND
V
G
B
P

Serial-based receiver (SPEKSAT, SBUS, ⬍ Receiver Mode

Note: Remember to configure a Serial Port (via Ports tab) and choose a Serial Receiver Provider when using RX_SERIAL feature.

SBUS ⬍ Serial Receiver Provider

Frsky R-XSR

F.Port

CLI:

```
set serialrx_halfduplex = ON
set serialrx_inverted = ON
save
```

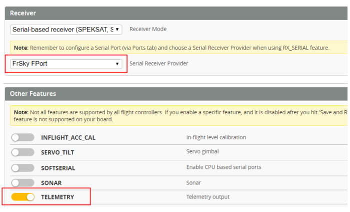

Receiver

Serial-based receiver (SPEKSAT, S ▾ Receiver Mode

Note: Remember to configure a Serial Port (via Ports tab) and choose a Serial Receiver Provider when using RX_SERIAL feature.

FrSky FPort ▾ Serial Receiver Provider

Other Features

Note: Not all features are supported by all flight controllers. If you enable a specific feature, and it is disabled after you hit 'Save and R feature is not supported on your board.

○	INFLIGHT_ACC_CAL	In-flight level calibration
○	SERVO_TILT	Servo gimbal
○	SOFTSERIAL	Enable CPU based serial ports
○	SONAR	Sonar
●	TELEMETRY	Telemetry output

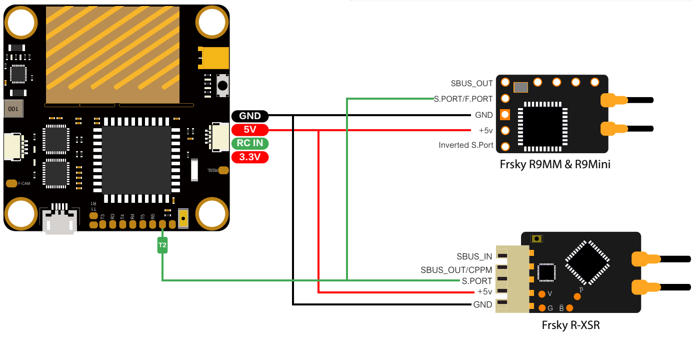
GND
5V
RC IN
3.3V
T2
SBUS_OUT
S.PORT/F.PORT
GND
+5v
Inverted S.Port
SBUS_IN
SBUS_OUT/CPPM
S.PORT
+5v
GND

Frsky R9MM & R9Mini

Frsky R-XSR

TBS Crossfire Nano RX

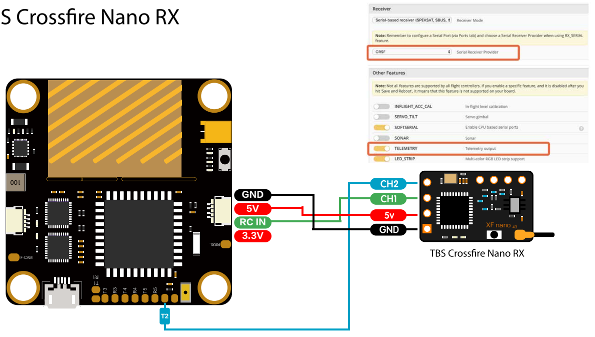
GND
5V
RC IN
3.3V
T2
CH2
CH1
5v
GND
XF nano 43

Receiver

Serial-based receiver (SPEKSAT, SBUS, ⬍ Receiver Mode

Note: Remember to configure a Serial Port (via Ports tab) and choose a Serial Receiver Provider when using RX_SERIAL feature.

CRSF ⬍ Serial Receiver Provider

Other Features

Note: Not all features are supported by all flight controllers. If you enable a specific feature, and it is disabled after you hit 'Save and Reboot', it means that this feature is not supported on your board.

○	INFLIGHT_ACC_CAL	In-flight level calibration
○	SERVO_TILT	Servo gimbal
●	SOFTSERIAL	Enable CPU based serial ports
○	SONAR	Sonar
●	TELEMETRY	Telemetry output
●	LED_STRIP	Multi-color RGB LED strip support

TBS Crossfire Nano RX

DSM/DSMX

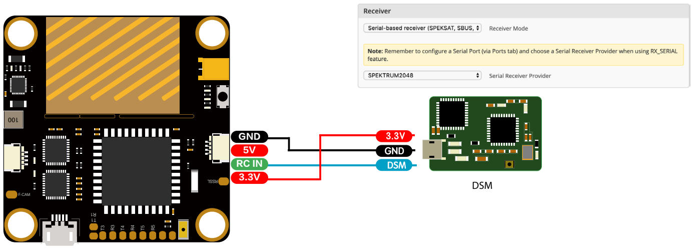
GND
5V
RC IN
3.3V
3.3V
GND
DSM

Receiver

Serial-based receiver (SPEKSAT, SBUS, ⬍ Receiver Mode

Note: Remember to configure a Serial Port (via Ports tab) and choose a Serial Receiver Provider when using RX_SERIAL feature.

SPEKTRUM2048 ⬍ Serial Receiver Provider

DSM

IBUS

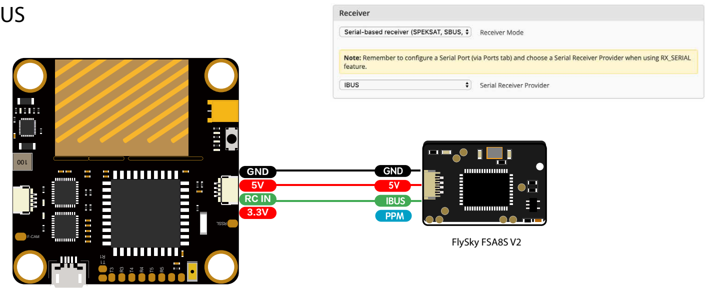
GND
5V
RC IN
3.3V
GND
5V
IBUS
PPM

Receiver

Serial-based receiver (SPEKSAT, SBUS, ⬍ Receiver Mode

Note: Remember to configure a Serial Port (via Ports tab) and choose a Serial Receiver Provider when using RX_SERIAL feature.

IBUS ⬍ Serial Receiver Provider

FlySky FSA8S V2

ESC

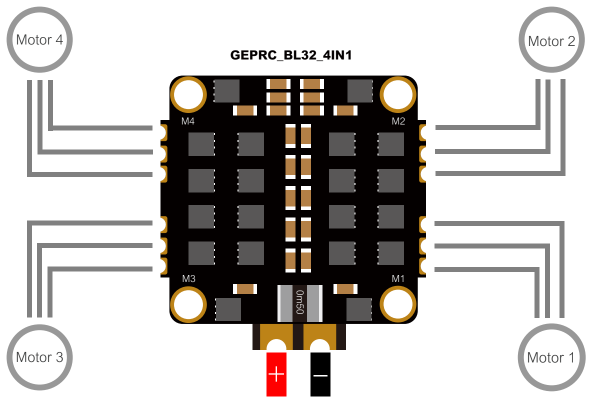
Motor 4
Motor 2
GEPRC_BL32_4IN1
M4
M2
M3
M1
Motor 3
Motor 1
+
−

3-6S Lipo battery

BLHeli_32 G50A 4in1 ESC(36*36 mm)

VTX

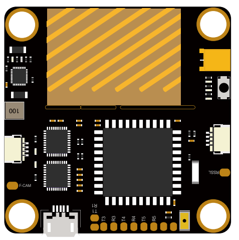
001
F-CAM
RSSL
T1
R1
T3
R3
T4
R4
T5
R5

Important note:
If you need to use the VTX button with Betaflight v3.3.0+, please disable the IRC TRAMP peripherals on UART4.

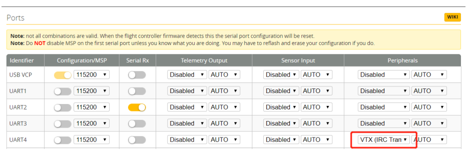

Ports

Note: not all combinations are valid. When the flight controller firmware detects this the serial port configuration will be reset.
Note: Do **NOT** disable MSP on the first serial port unless you know what you are doing. You may have to reflash and erase your configuration if you do.

Identifier	Configuration/MSP		Serial Rx	Telemetry Output		Sensor Input		Peripherals	
USB VCP	●	115200 ▾	○	Disabled ▾	AUTO ▾	Disabled ▾	AUTO ▾	Disabled ▾	AUTO ▾
UART1	○	115200 ▾	○	Disabled ▾	AUTO ▾	Disabled ▾	AUTO ▾	Disabled ▾	AUTO ▾
UART2	○	115200 ▾	●	Disabled ▾	AUTO ▾	Disabled ▾	AUTO ▾	Disabled ▾	AUTO ▾
UART3	○	115200 ▾	○	Disabled ▾	AUTO ▾	Disabled ▾	AUTO ▾	Disabled ▾	AUTO ▾
UART4	○	115200 ▾	○	Disabled ▾	AUTO ▾	Disabled ▾	AUTO ▾	VTX (IRC Tran ▾	AUTO ▾

5.8G 600mW VTX

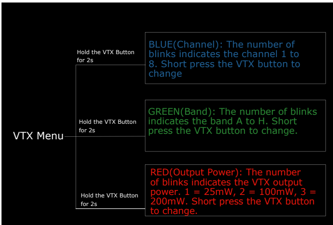
VTX Menu
Hold the VTX Button for 2s
Hold the VTX Button for 2s
Hold the VTX Button for 2s

BLUE(Channel): The number of blinks indicates the channel 1 to 8. Short press the VTX button to change

GREEN(Band): The number of blinks indicates the band A to H. Short press the VTX button to change.

RED(Output Power): The number of blinks indicates the VTX output power. 1 = 25mW, 2 = 100mW, 3 = 200mW. Short press the VTX button to change.

Frequency Table

Note: Antenna must be installed BEFORE power on.

	CH1	CH2	CH3	CH4	CH5	CH6	CH7	CH8
Band A	5865	5845	5825	5805	5785	5765	5745	5725
Band B	5733	5752	5771	5790	5809	5828	5847	5866
Band E	5705	5685	5665	5645	5885	5905	5925	5945
Band F	5740	5760	5780	5800	5820	5840	5860	5880
Band R	5658	5695	5732	5769	5806	5843	5880	5917
Band H	5362	5399	5436	5473	5510	5547	5584	5621

How to turn VTX on and off?
Quickly double press the VTX Button to switch between on and off. The VTX LEDs will blink together when the working state changes.

LED & Buzzer

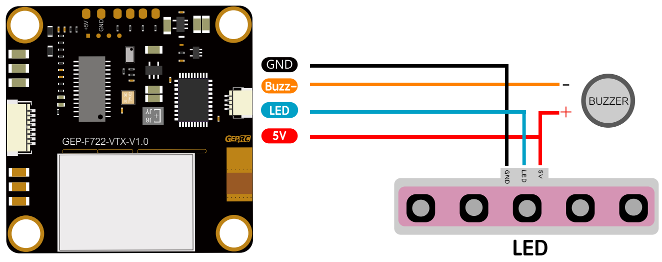
GEP-F722-VTX-V1.0
GND
Buzz-
LED
5V
-
+
BUZZER
GND
LED
5V
LED

Camera

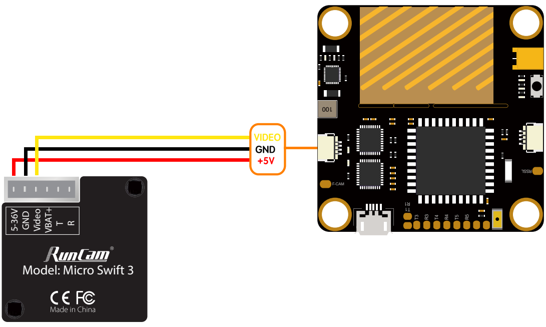
VIDEO
GND
+5V
5-36V
GND
Video
VBAT+
T
R
RunCam
Model: Micro Swift 3
CE FC
Made in China

GPS & Compass

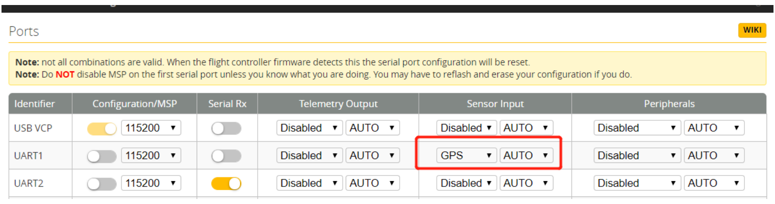

Note: not all combinations are valid. When the flight controller firmware detects this the serial port configuration will be reset.
Note: Do **NOT** disable MSP on the first serial port unless you know what you are doing. You may have to reflash and erase your configuration if you do.

Identifier	Configuration/MSP		Serial Rx	Telemetry Output		Sensor Input		Peripherals	
USB VCP	●	115200	○	Disabled	AUTO	Disabled	AUTO	Disabled	AUTO
UART1	○	115200	○	Disabled	AUTO	GPS	AUTO	Disabled	AUTO
UART2	○	115200	●	Disabled	AUTO	Disabled	AUTO	Disabled	AUTO

Attention!Because the compass function is not complete on BF firmware, please use it carefully.
If you want to have the complete compass function, please use INAV firmware.
INAV firmware:IFLIGHTF7 TWING

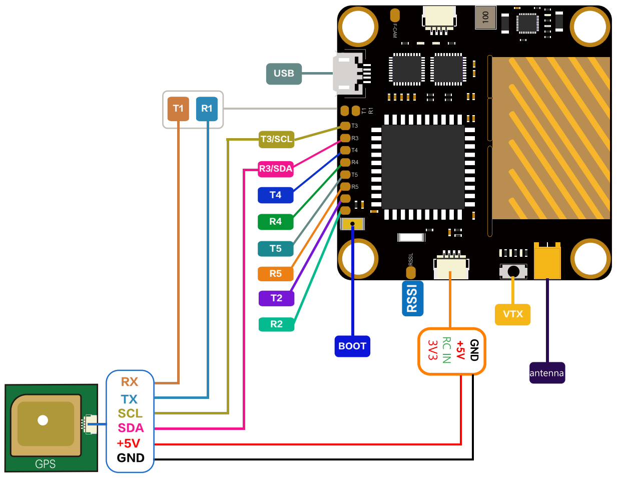
USB
T1
R1
T3/SCL
R3/SDA
T4
R4
T5
R5
T2
R2
BOOT
RSSI
VTX
+5V
RC IN
3V3
GND
antenna
RX
TX
SCL
SDA
+5V
GND
GPS

Official website
www.geprc.com

Manual
geprc.com/support

facebook
facebook.com/geprc

Instagram
instagram.com/geprc

GEPRC
www.geprc.com